C · TECH

70 MHz Bandpass Filter
7.00 MHz Bandwidth

311521

Typical Performance

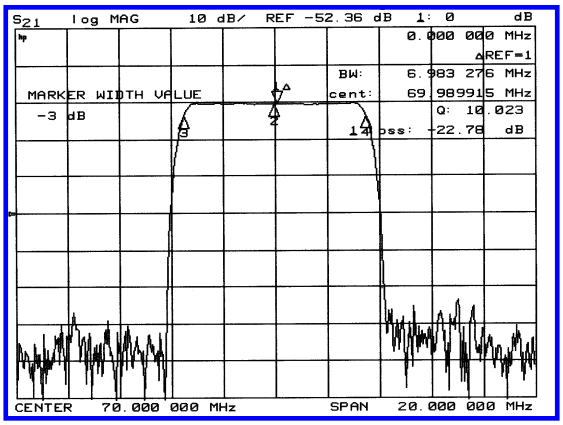

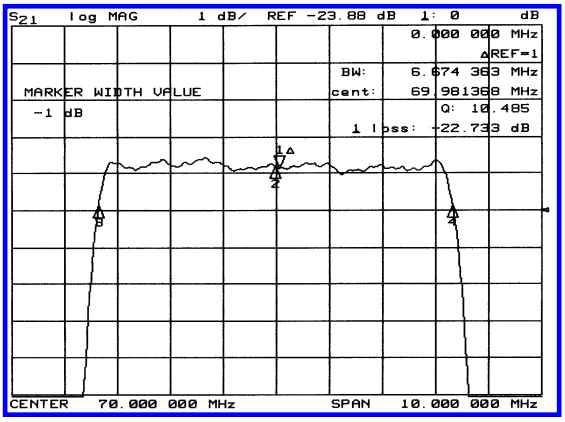

Specification

Parameter	Unit	Min.	Typ.	Max.
Center Frequency	Mhz	69.92	70.00	70.08
Insertion Loss	dB	-	22.5	24.0
1dB Bandwidth	Mhz	6.40	6.65	-
3dB Bandwidth	Mhz	6.90	7.00	-
40dB Bandwidth	Mhz	-	8.25	8.50
Passband Ripple	dB	-	0.45	0.80
Group Delay Variation	nsec	-	80	150
Absolute Delay	μsec	-	2.45	-
Ultimate Attenuation	dB	50	60	-
Substrate Material	-	$YZ\text{-}LiNbO_3$		

Package Dimension

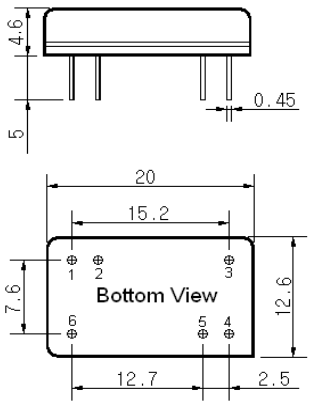

Matching Configuration

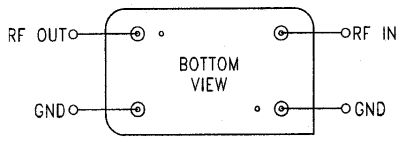

Bottom View
Source / Load Impedance = 50Ω
Ambient Temperature = 25°C

12/01/2001

C·Tech Co., Ltd. Tel. : 82-31-703-2086 Fax. : 82-31-703-2124